Skjutlag	Tavla	
3	17	Wiktor Thulin

Umeå	Umeå Skf		Vb
27.01.2024	Förbundsmästerskap 2024	Umeå skytteallians	

Prov

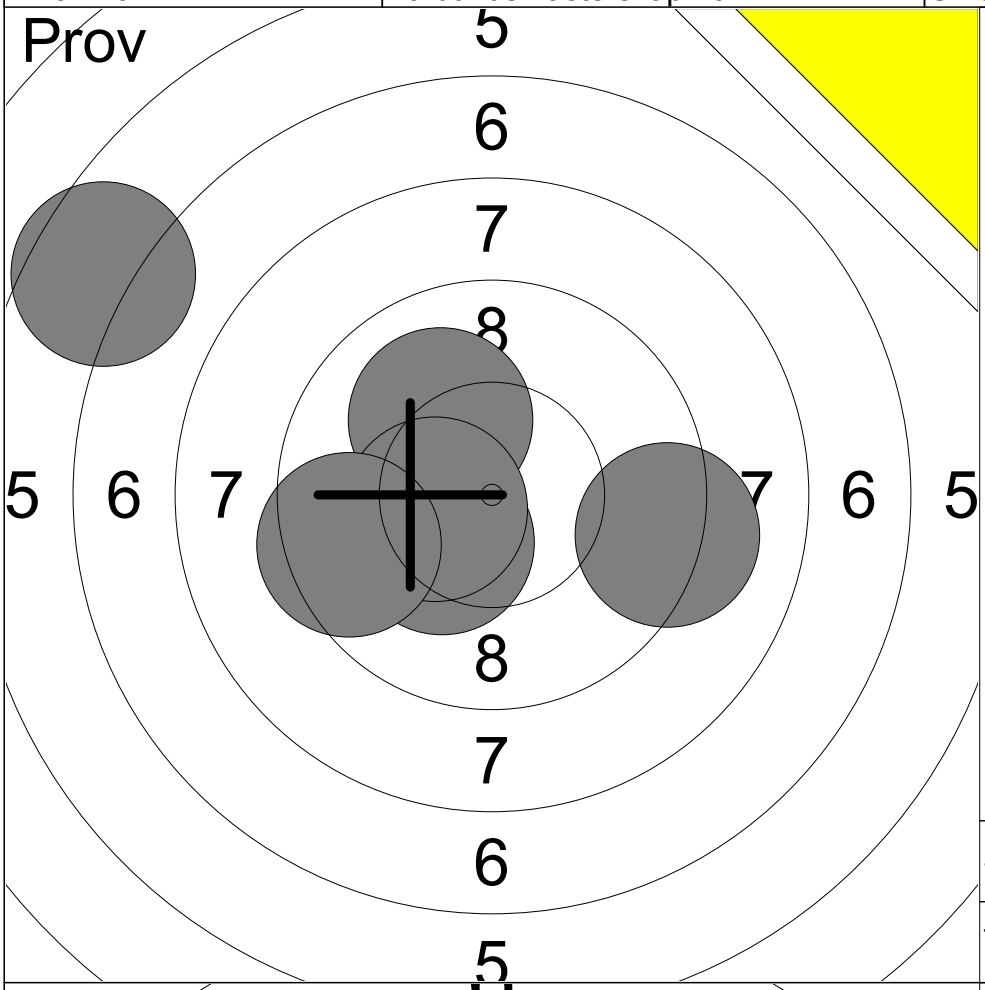

1:	6.6	↖
2:	10.1	↖
3:	10.2x	↙
4:	10.3x	↙
5:	10.4x	←
6:	9.5	↙
7:	9.2	→

Serie	66.3
Total	371.0

40 Skott

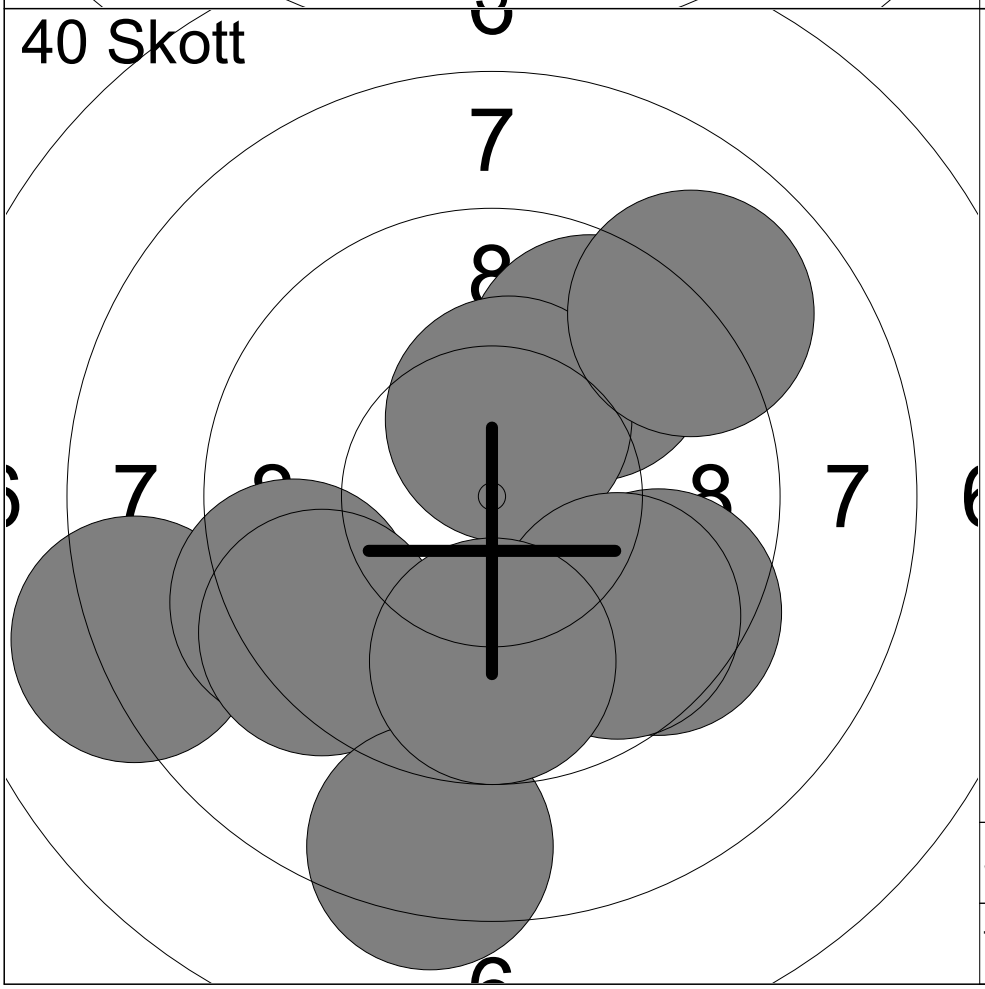

1:	8.1	↙
2:	9.7	↗
3:	10.4x	↑
4:	9.0	↗
5:	9.3	↙
6:	9.4	↙
7:	9.5	↘
8:	8.4	↓
9:	9.7	↘
10:	9.8	↓

Serie	93.3
Total	464.3

Skjutlag	Tavla	Emma Johansson		
3	18			
Umeå		Ramselefors Skf		Vb
27.01.2024		Förbundsmästerskap 2024	Umeå skytteallians	

Prov

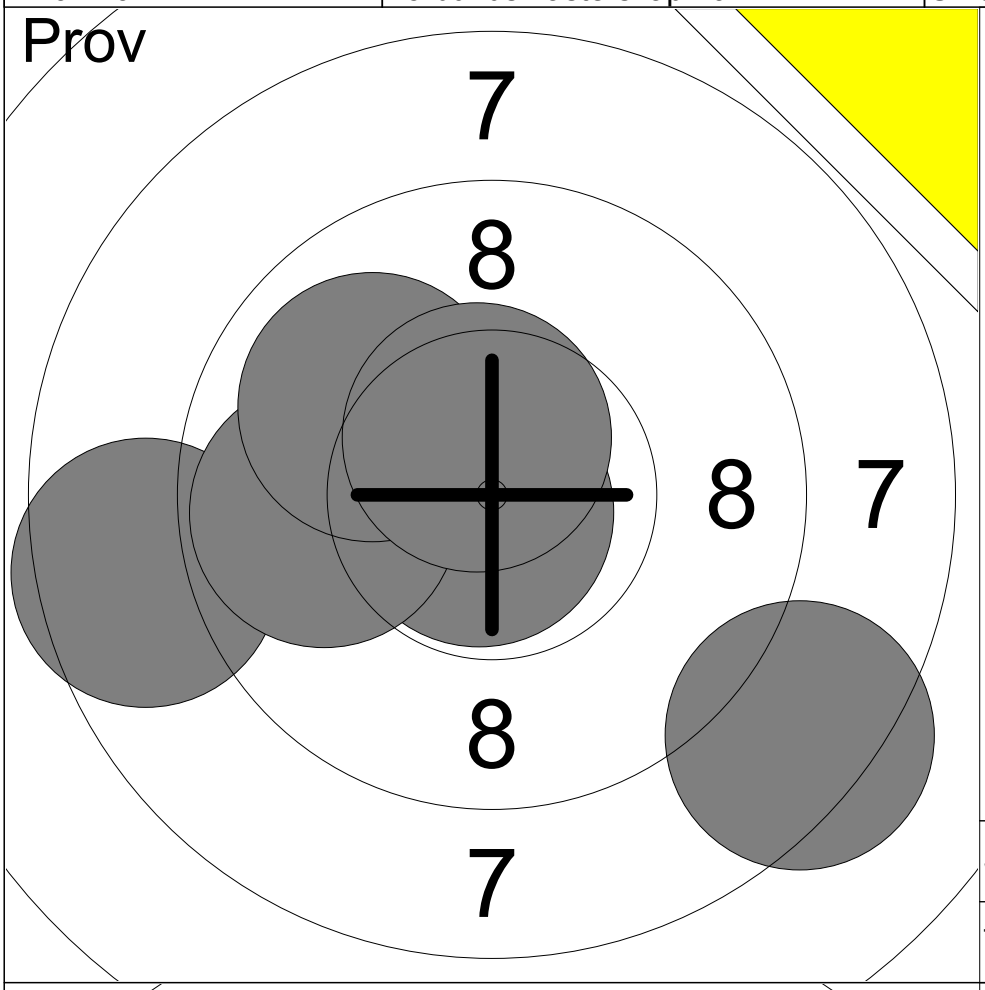

1:	10.8x	↙
2:	8.6	←
3:	9.8	←
4:	10.0	↖
5:	10.6x	↑
6:	8.3	↘

Serie	58.1
Total	368.0

40 Skott

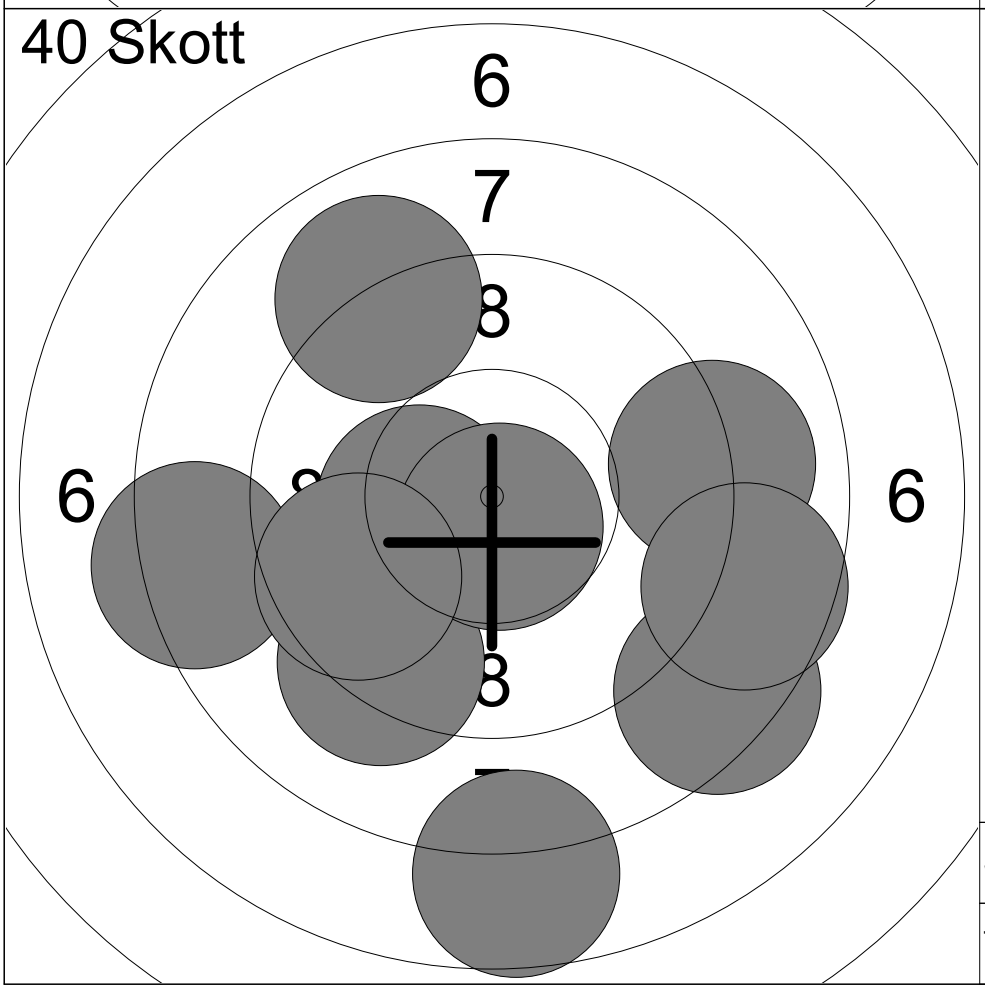

1:	7.7	↓
2:	8.4	↘
3:	10.3x	←
4:	9.0	→
5:	8.3	←
6:	8.6	↘
7:	9.0	↖
8:	9.2	↙
9:	10.7x	↓
10:	9.6	↙

Serie	90.8
Total	458.8

Skjutlag	Tavla	Emma Eriksson		
3	19			
Umeå		Ramselefors Skf		Vb
27.01.2024		Förbundsmästerskap 2024	Umeå skytteallians	

Prov

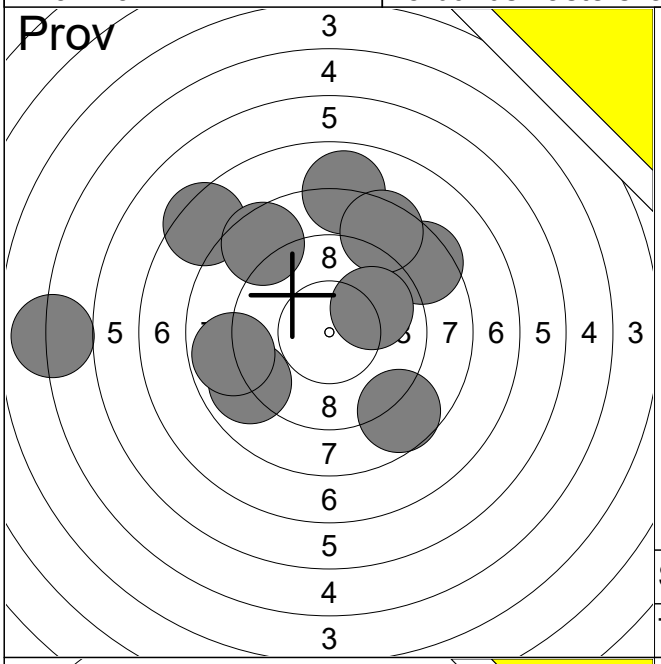

1:	8.5	↗
2:	7.9	↑
3:	8.9	↙
4:	7.4	↖
5:	8.7	↘
6:	5.0	←
7:	8.8	←
8:	8.5	↗
9:	8.6	↖
10:	9.9	↗
Serie		82.2
Total		365.0

Prov

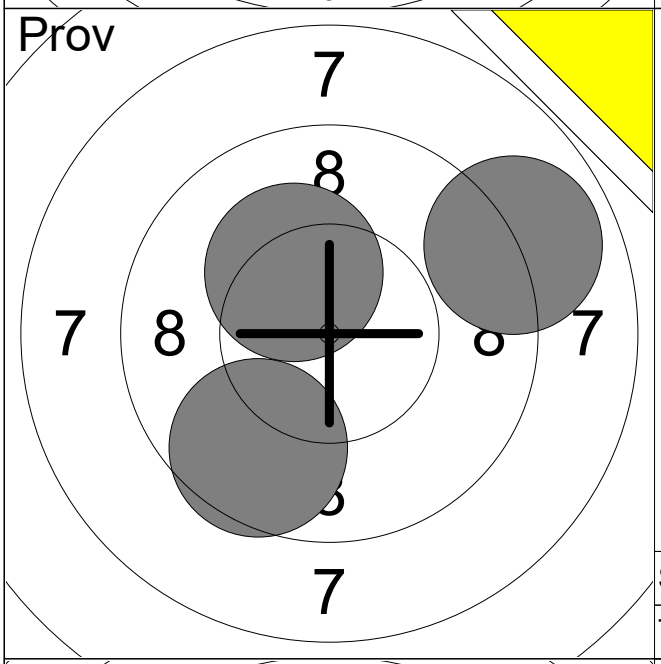

11:	10.2x	↖
12:	8.9	↗
13:	9.6	↙
Serie		28.7
Total		365.0

40 Skott

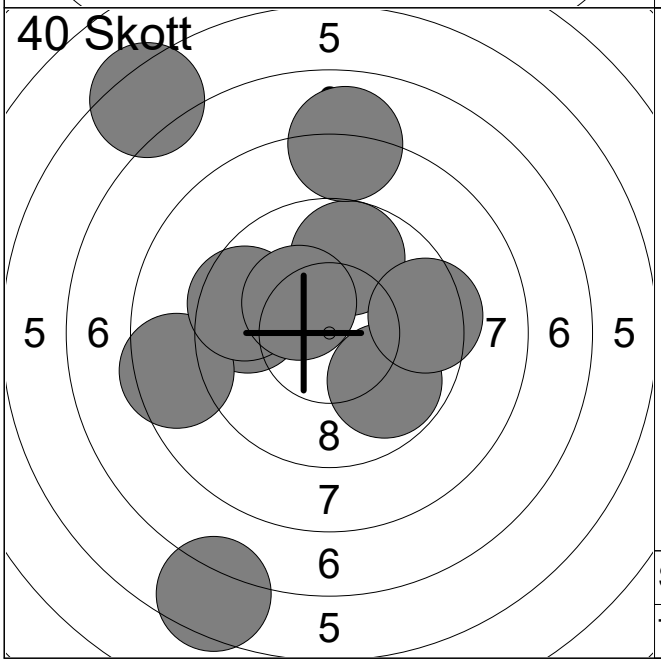

1:	6.3	↖
2:	9.8	↘
3:	9.7	←
4:	6.5	↙
5:	9.7	↑
6:	8.5	←
7:	9.4	→
8:	9.5	↖
9:	10.3x	↖
10:	8.0	↑
Serie		87.7
Total		452.7

Skjutlag	Tavla	Milly Burström		
3	21			
Umeå		Bjurholm/Balsjö Skf		Vb
27.01.2024		Förbundsmästerskap 2024	Umeå skytteallians	

Prov

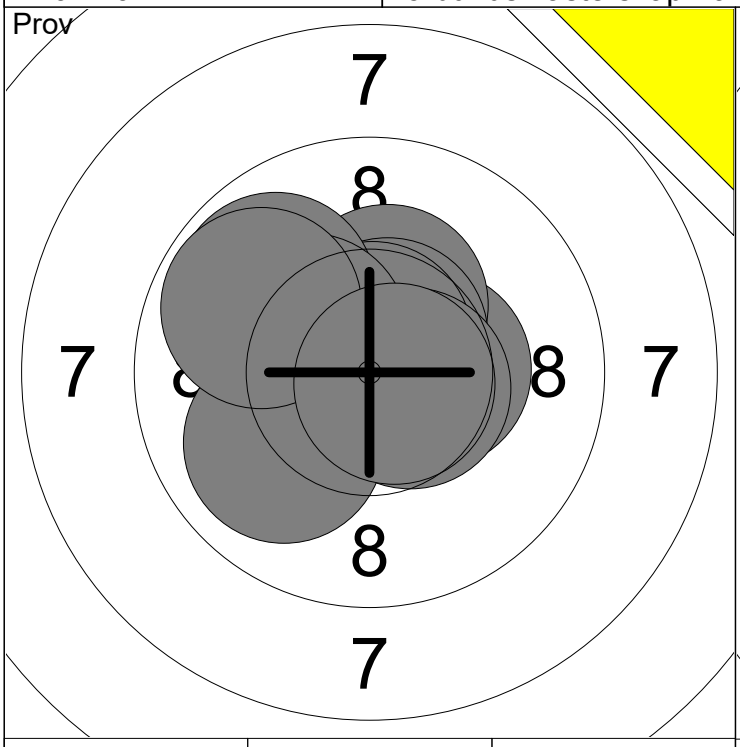

1:	10.4x →	6:	9.9 ↖	Serie	103.3
2:	10.3x ↑	7:	10.3x ↖		
3:	10.6x ↗	8:	10.0 ↙		
4:	10.7x ↑	9:	9.8 ↖	Total	400.0
5:	10.6x ↘	10:	10.7x ↘		

Prov

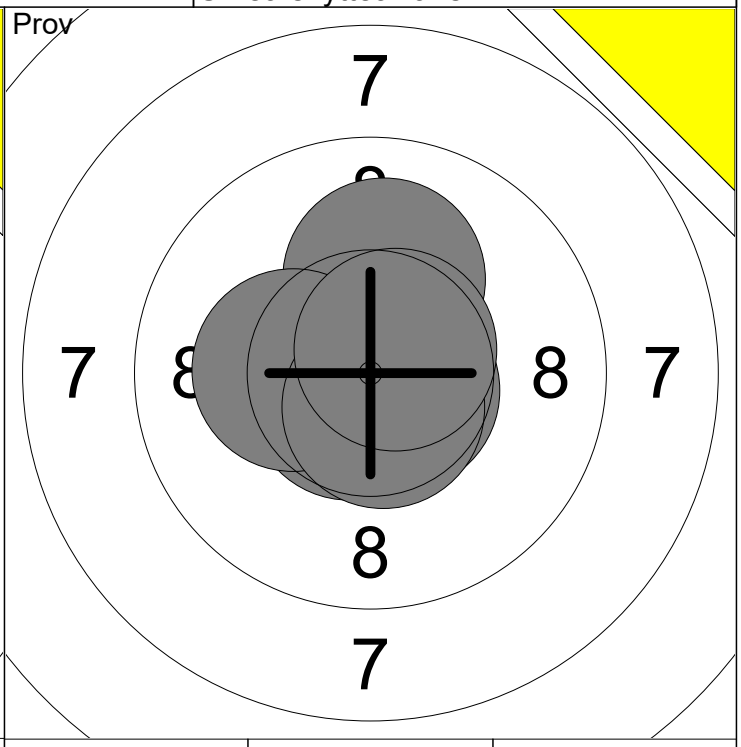

11:	10.5x ←	16:	10.6x ↘	Serie	73.5
12:	10.7x ↘	17:	10.6x ↗		
13:	10.7x ↙				
14:	10.1 ↑			Total	400.0
15:	10.3x ←				

40 Skott

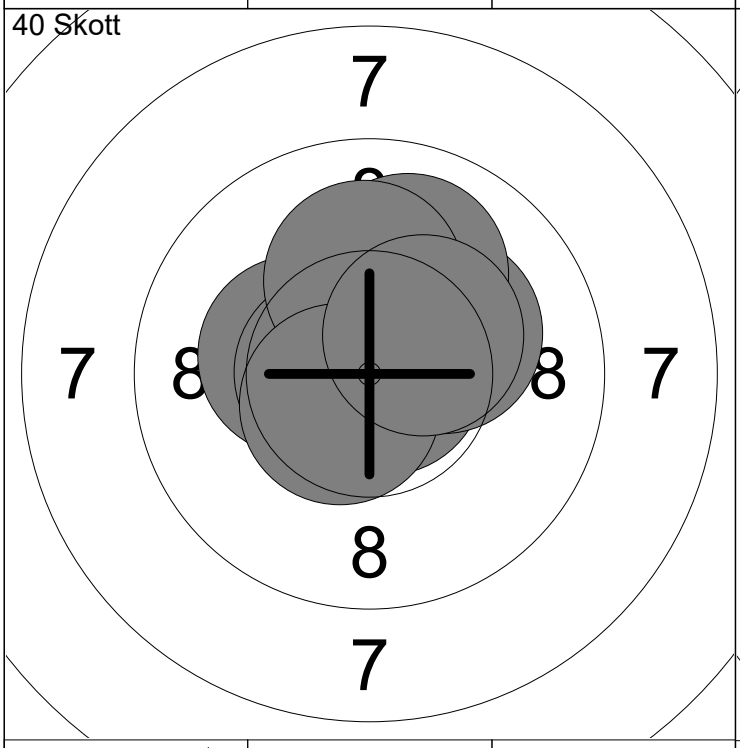

1:	10.8x ↑	6:	10.6x ←	Serie	104.4
2:	10.6x ↗	7:	10.0 ↗		
3:	10.8x →	8:	10.1 ↑		
4:	10.3x ←	9:	10.6x ↙	Total	504.4
5:	10.2x ↗	10:	10.4x ↗		

Extra

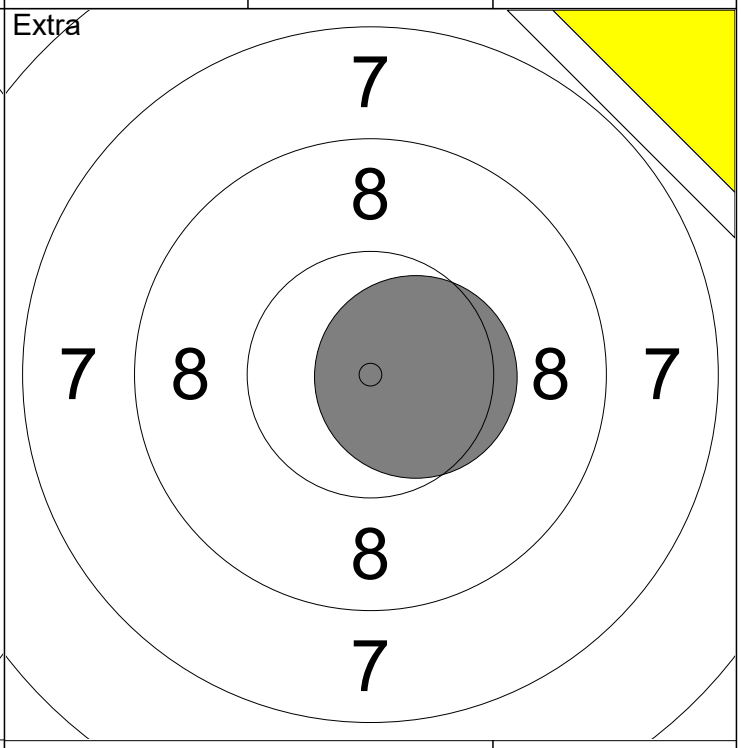

1:	10.5x →	Serie	10.5
		Total	504.4

Skjutlag	Tavla	Monica Häggström		
3	22			
Umeå		Ramselefors Skf		Vb
27.01.2024		Förbundsmästerskap 2024	Umeå skytteallians	

Prov

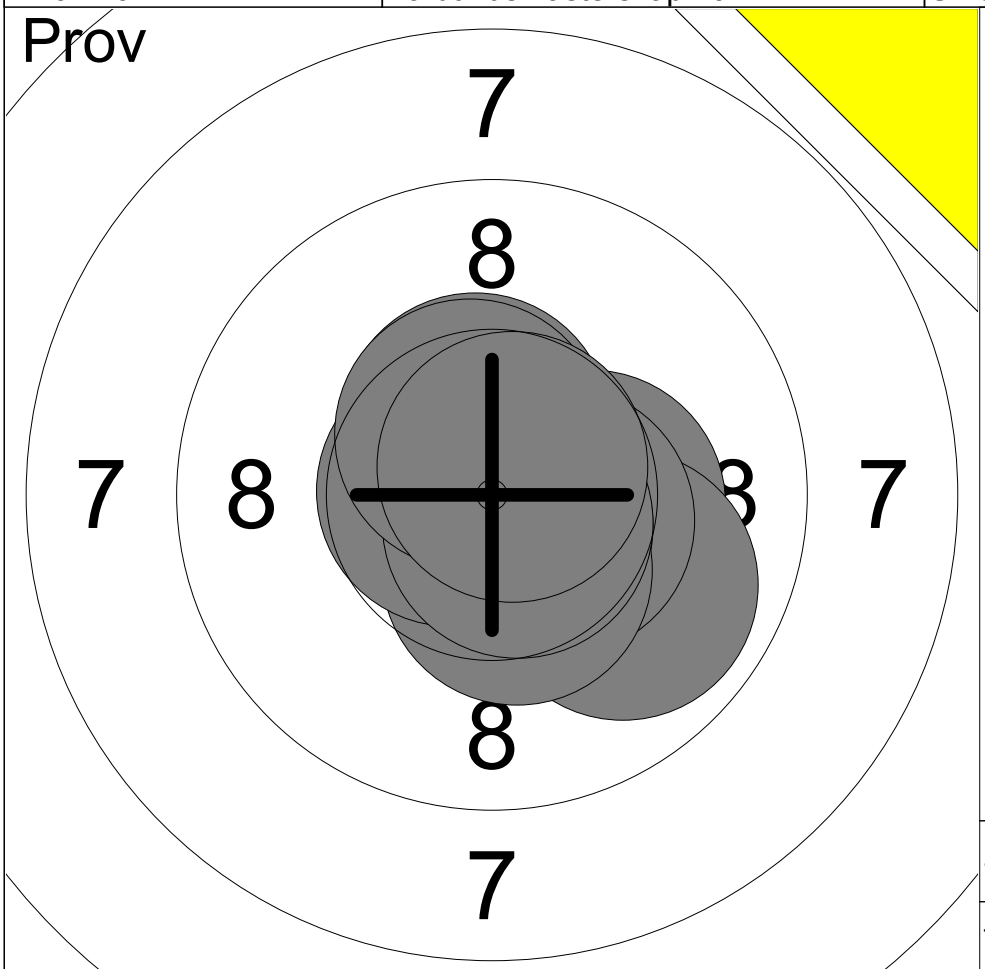

1:	10.3x	→
2:	9.9	↘
3:	10.5x	↘
4:	10.7x	↘
5:	10.4x	↓
6:	10.7x	←
7:	10.5x	↑
8:	10.7x	↘
9:	10.5x	↑
10:	10.7x	↗
Serie		104.9
Total		400.0

40 Skott

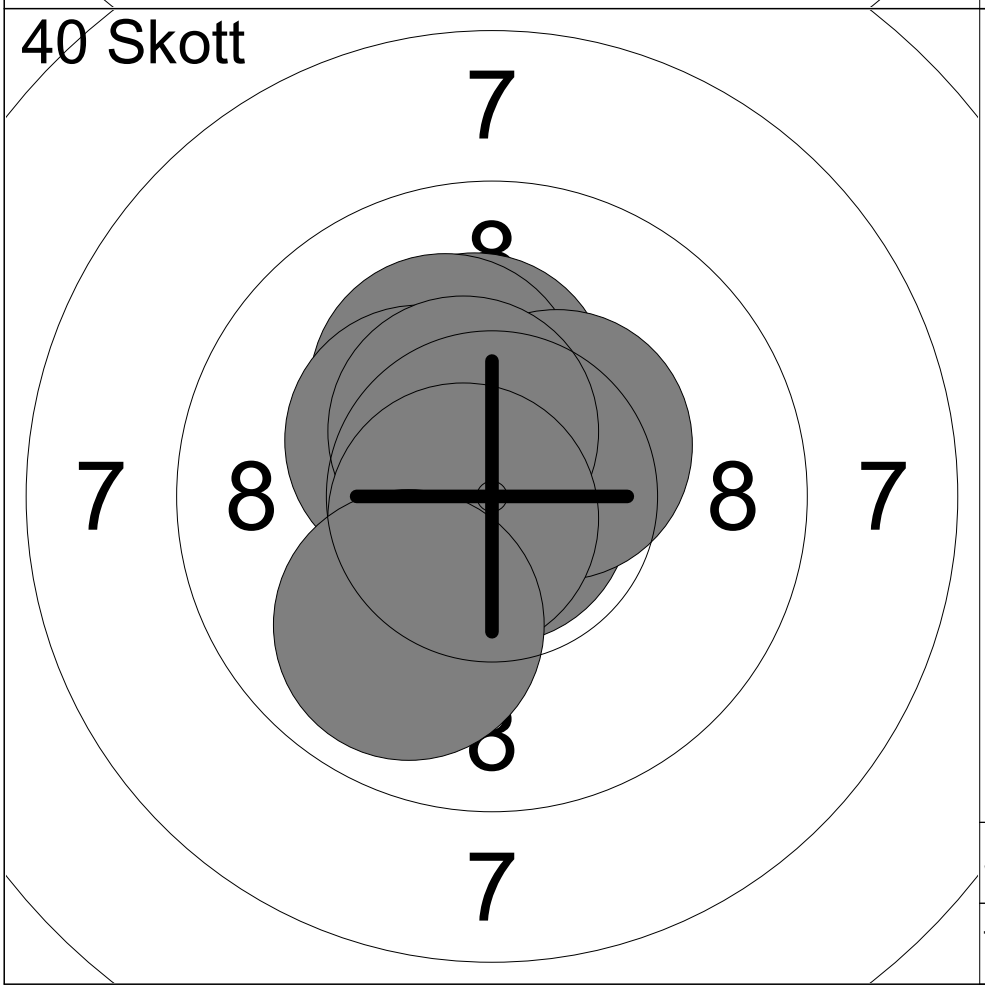

1:	10.6x	↖
2:	10.2x	↑
3:	10.9x	↓
4:	10.2x	↖
5:	10.4x	↗
6:	10.5x	↖
7:	10.3x	↖
8:	10.5x	↑
9:	10.7x	↙
10:	9.9	↙
Serie		104.2
Total		504.2

Skjutlag	Tavla	Melker Häggström		
3	23			
Umeå		Ramselefors Skf		Vb
27.01.2024		Förbundsmästerskap 2024	Umeå skytteallians	

Prov

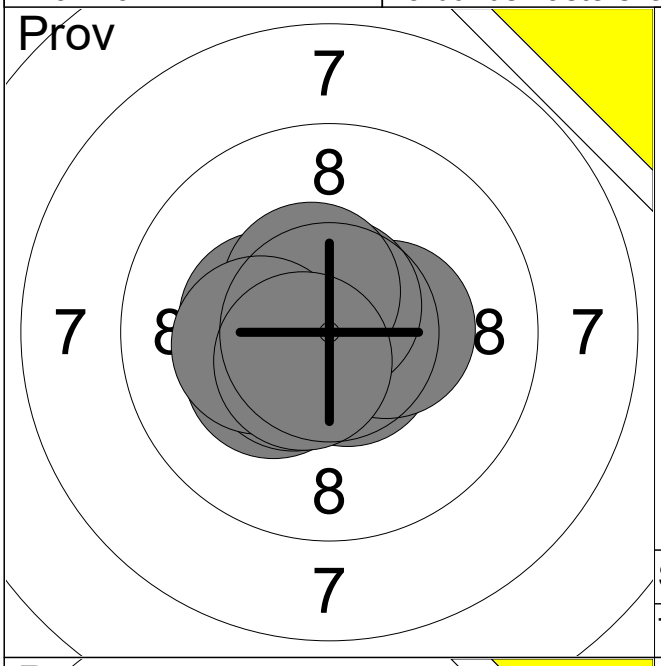

1:	10.6x	↘
2:	10.8x	→
3:	10.4x	→
4:	10.7x	↑
5:	10.3x	↙
6:	10.3x	←
7:	10.5x	↖
8:	10.5x	↙
9:	10.2x	←
10:	10.6x	↙
Serie		104.9
Total		399.0

Prov

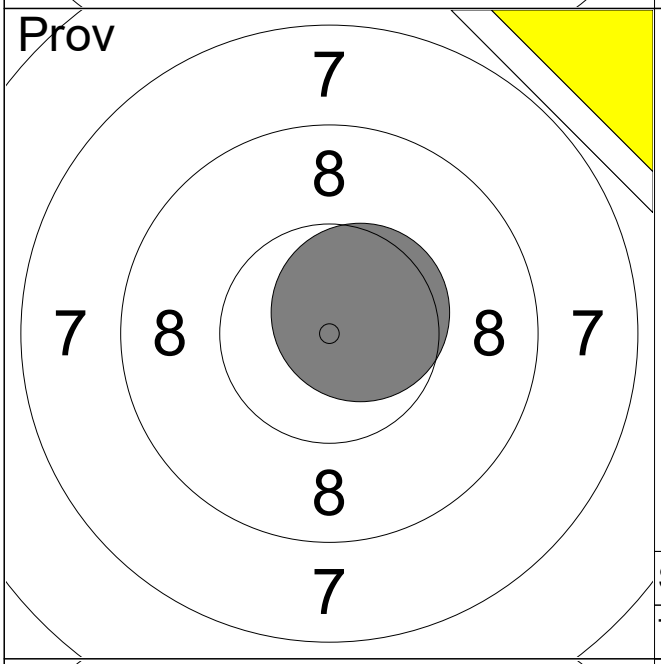

11:	10.6x	↗
Serie		10.6
Total		399.0

40 Skott

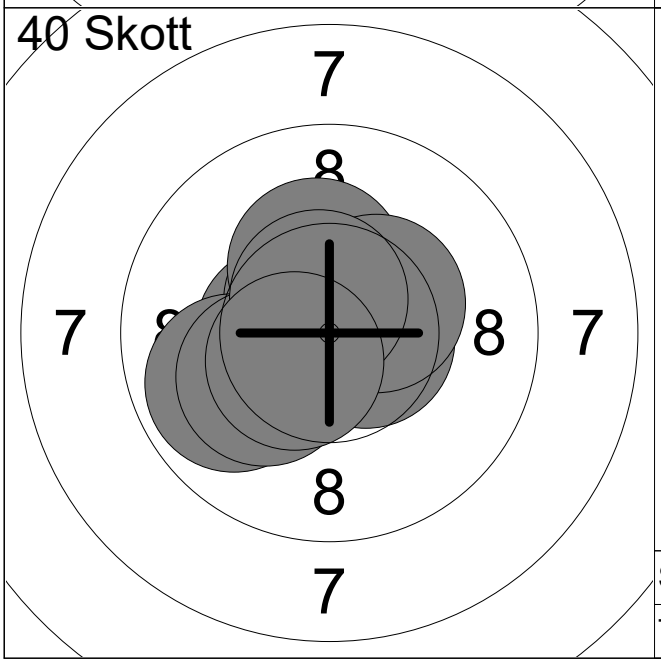

1:	10.5x	←
2:	10.6x	↖
3:	9.9	↙
4:	10.3x	↑
5:	10.8x	↑
6:	10.6x	→
7:	10.4x	↗
8:	10.2x	↙
9:	10.6x	↖
10:	10.5x	↙
Serie		104.4
Total		503.4

Skjutlag	Tavla	
3	24	Linus Holmlund

Umeå	Umeå Skf		Vb
27.01.2024	Förbundsmästerskap 2024	Umeå skytteallians	

Prov

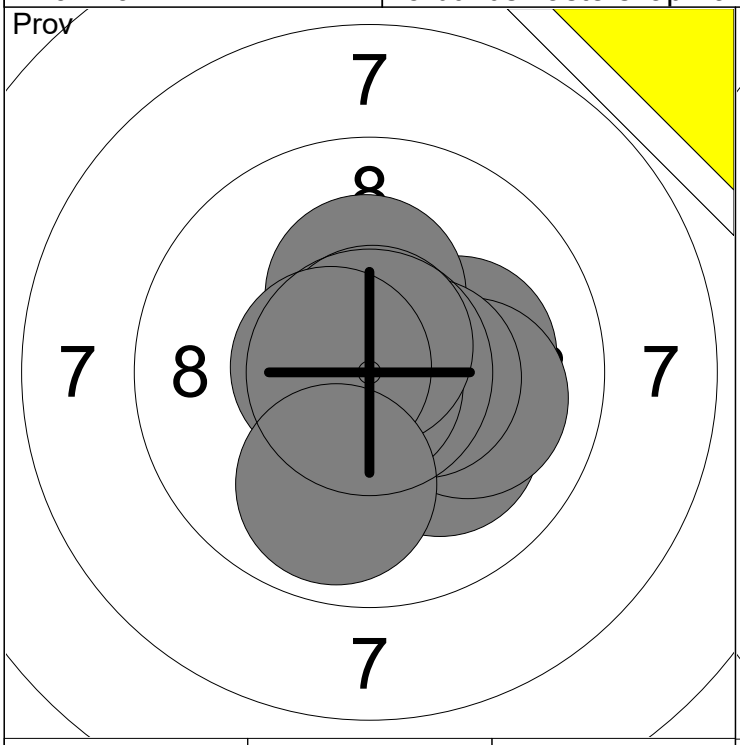

1:	10.2x	6:	10.8x	Serie	103.8
2:	10.1	7:	10.7x		
3:	10.0	8:	10.7x		
4:	10.3x	9:	10.6x	Total	399.0
5:	10.5x	10:	9.9		

Prov

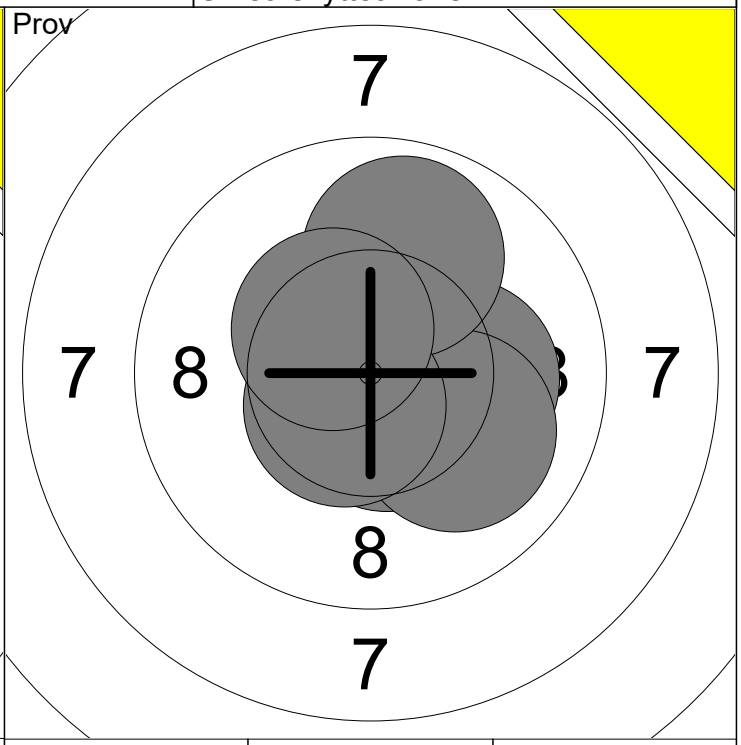

11:	10.6x	16:	10.4x	Serie	61.7
12:	10.2x				
13:	10.0				
14:	9.9			Total	399.0
15:	10.6x				

40 Skott

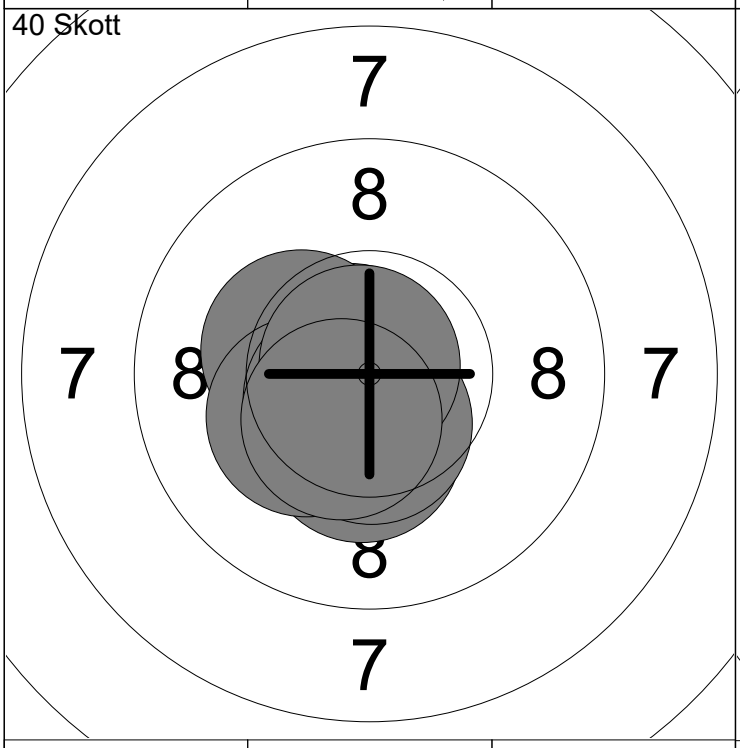

1:	10.8x	6:	10.3x	Serie	105.4
2:	10.8x	7:	10.6x		
3:	10.5x	8:	10.5x		
4:	10.3x	9:	10.8x	Total	504.4
5:	10.3x	10:	10.5x		

Extra

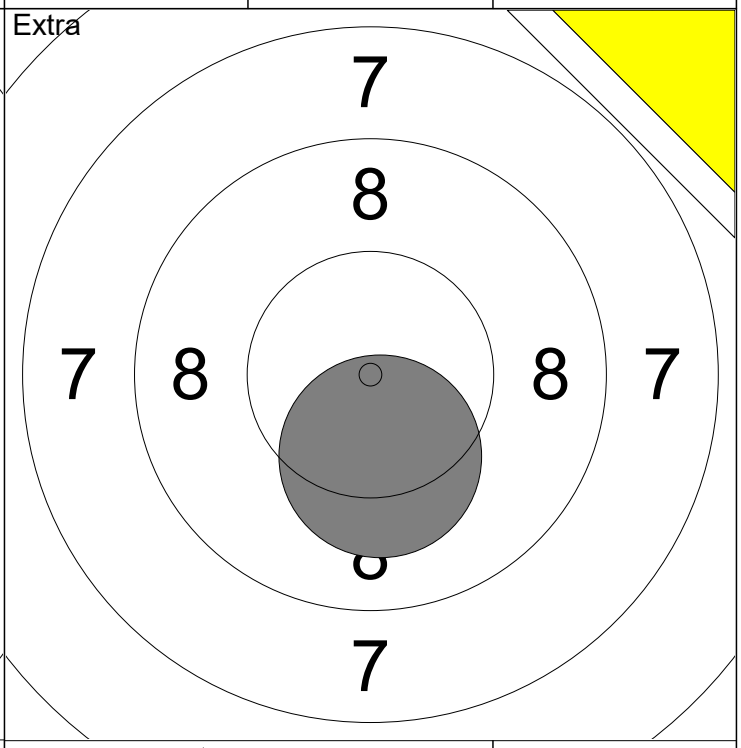

1:	10.2x	Serie	10.2
		Total	504.4

Skjutlag	Tavla	Filip Hansson		
3	25			
Umeå		Vännäs Skf		Vb
27.01.2024		Förbundsmästerskap 2024	Umeå skytteallians	

Prov

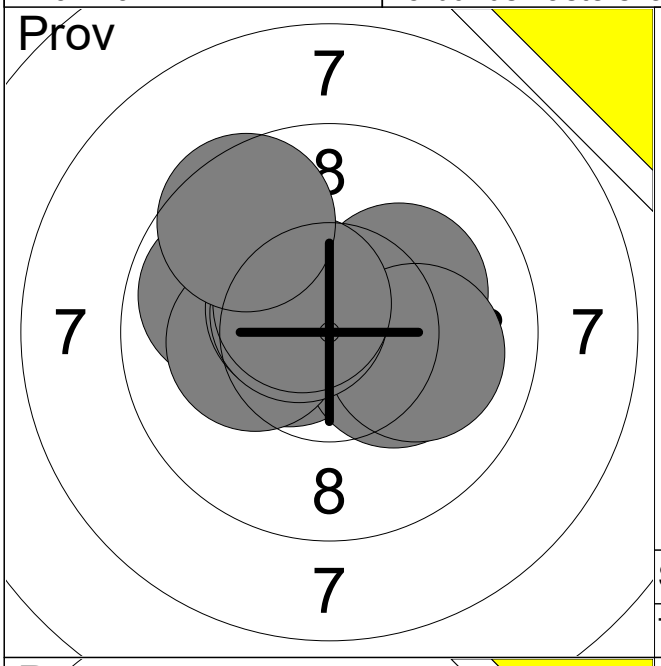

1:	10.5x	←
2:	9.9	↖
3:	10.3x	↘
4:	10.2x	←
5:	10.1	↗
6:	10.1	→
7:	10.5x	↖
8:	10.6x	↖
9:	10.6x	↖
10:	9.6	↖
Serie		102.4
Total		398.0

Prov

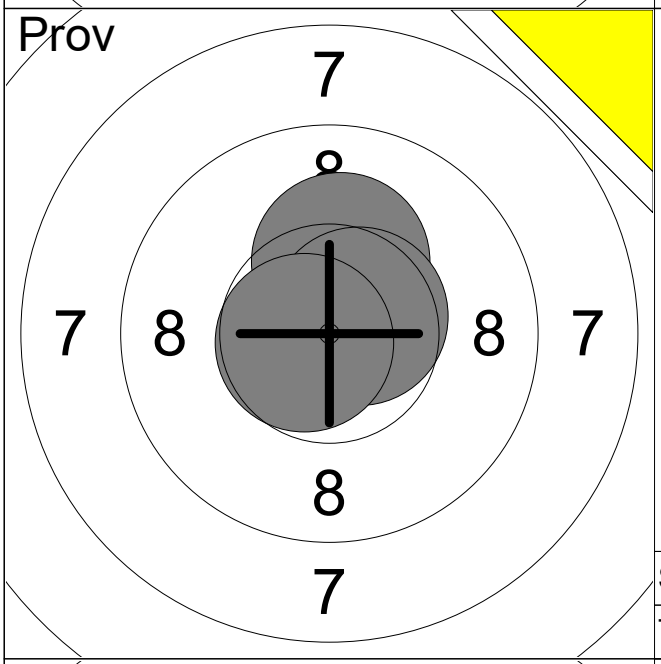

11:	10.2x	↑
12:	10.6x	↗
13:	10.7x	←
Serie		31.5
Total		398.0

40 Skott

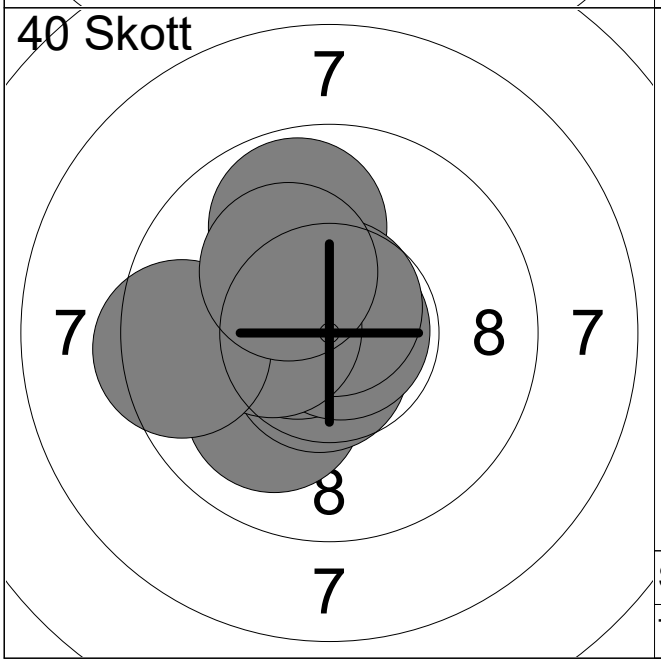

1:	10.7x	↙
2:	10.0	↙
3:	10.6x	↓
4:	9.8	↑
5:	10.6x	←
6:	10.8x	→
7:	10.7x	↑
8:	10.4x	←
9:	9.5	←
10:	10.2x	↖
Serie		103.3
Total		501.3

Skjutlag	Tavla	Emil Holmlund		
3	26			
Umeå		Umeå Skf		Vb
27.01.2024		Förbundsmästerskap 2024	Umeå skytteallians	

Prov

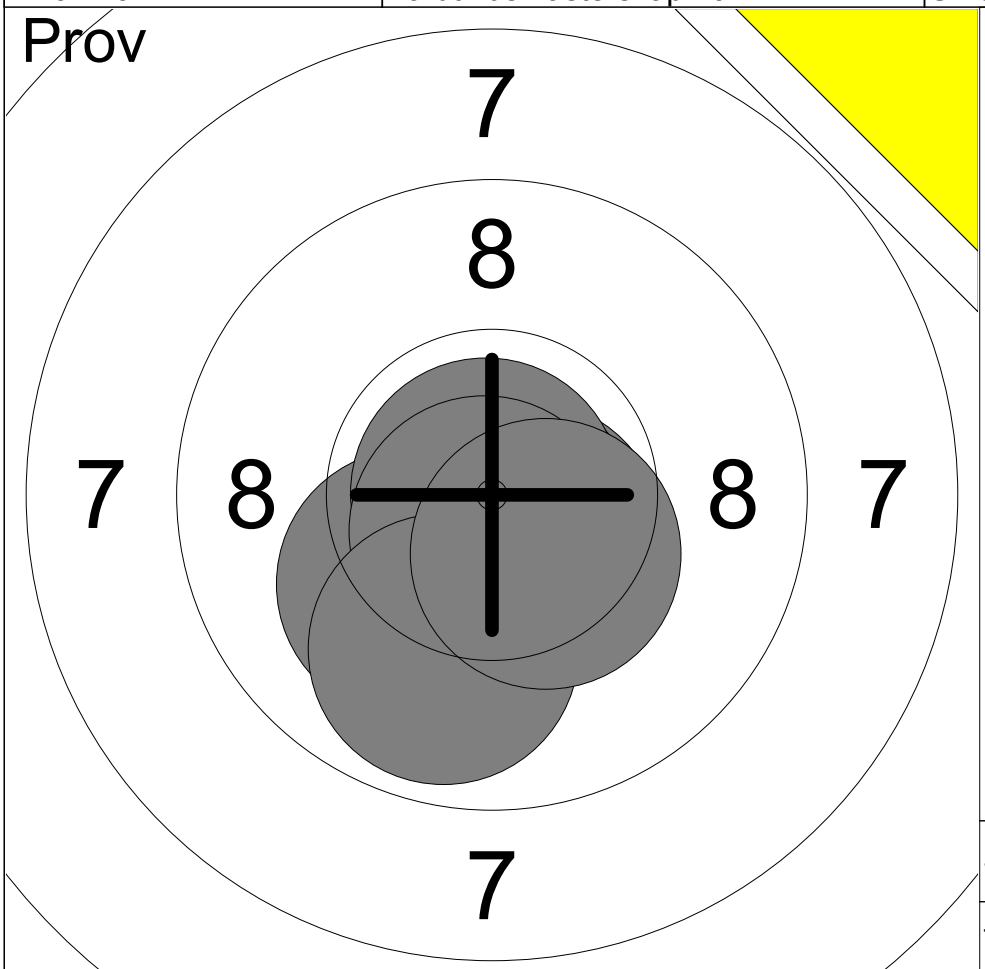

1:	10.6x	↘
2:	10.8x	↓
3:	10.2x	↙
4:	10.9x	←
5:	10.5x	↓
6:	10.7x	↓
7:	9.9	↓
8:	10.4x	↘

Serie	84.0
Total	396.0

40 Skott

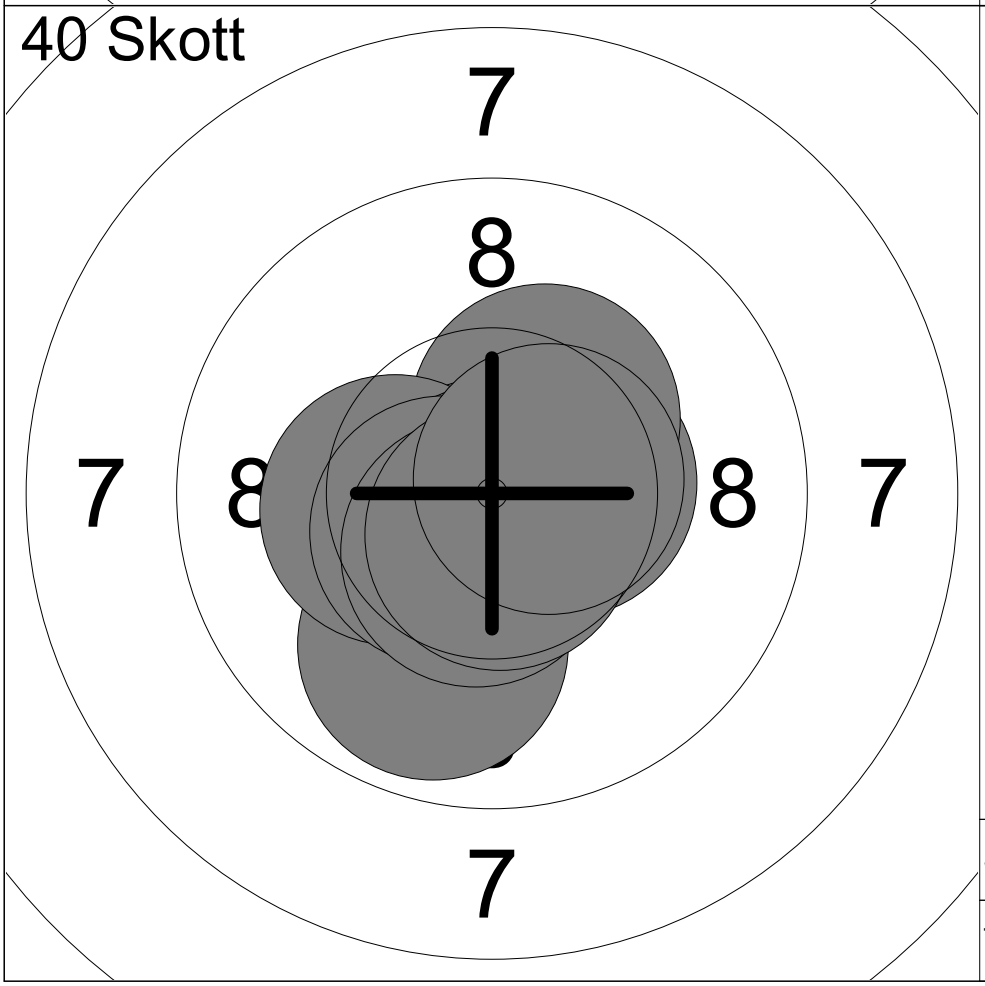

1:	9.9	↙
2:	10.5x	→
3:	10.3x	↗
4:	10.8x	↓
5:	10.3x	←
6:	10.8x	↓
7:	10.5x	↙
8:	10.5x	↓
9:	10.7x	↓
10:	10.6x	→

Serie	104.9
Total	500.9

Skjutlag	Tavla	
3	27	Alexander Lindahl

Umeå	Vännäs Skf		Vb
27.01.2024	Förbundsmästerskap 2024	Umeå skytteallians	

Prov

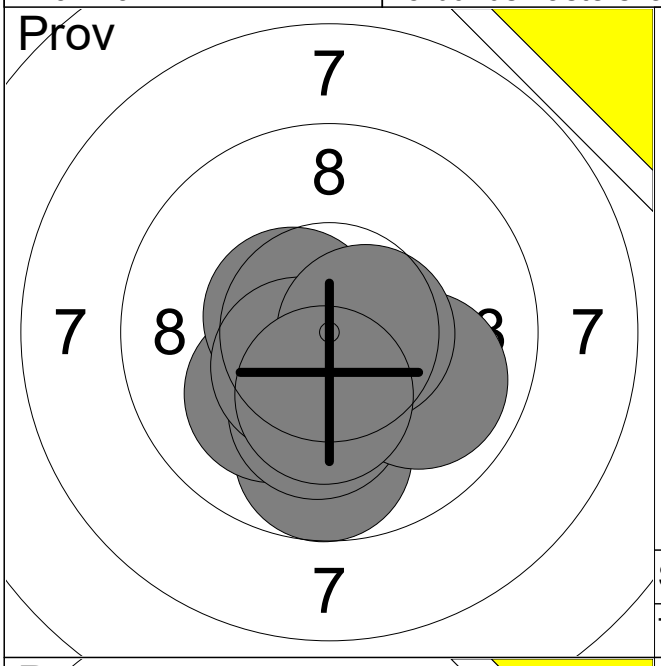

1:	10.9x	↓
2:	9.7	↓
3:	10.6x	↙
4:	10.1	↙
5:	10.5x	↖
6:	10.2x	↓
7:	9.9	↘
8:	10.5x	↙
9:	10.6x	→
10:	10.3x	↓
Serie		103.3
Total		396.0

Prov

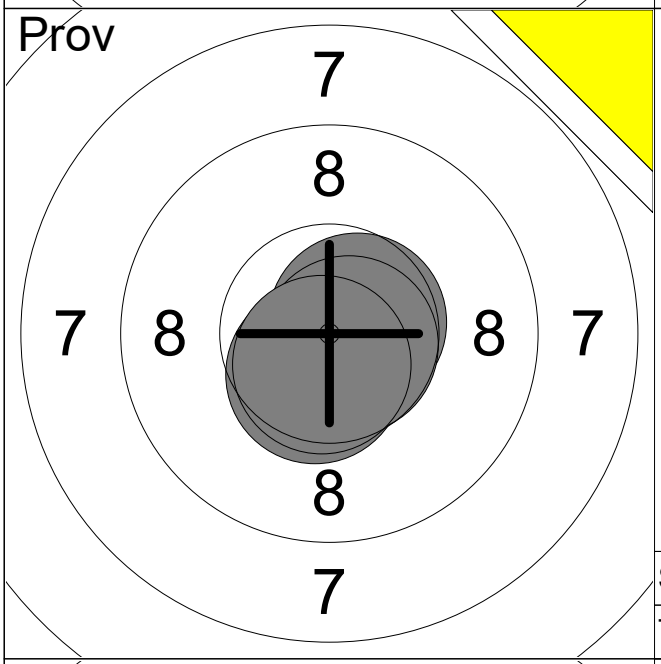

11:	10.7x	↗
12:	10.5x	↓
13:	10.7x	↘
14:	10.6x	↓
Serie		42.5
Total		396.0

40 Skott

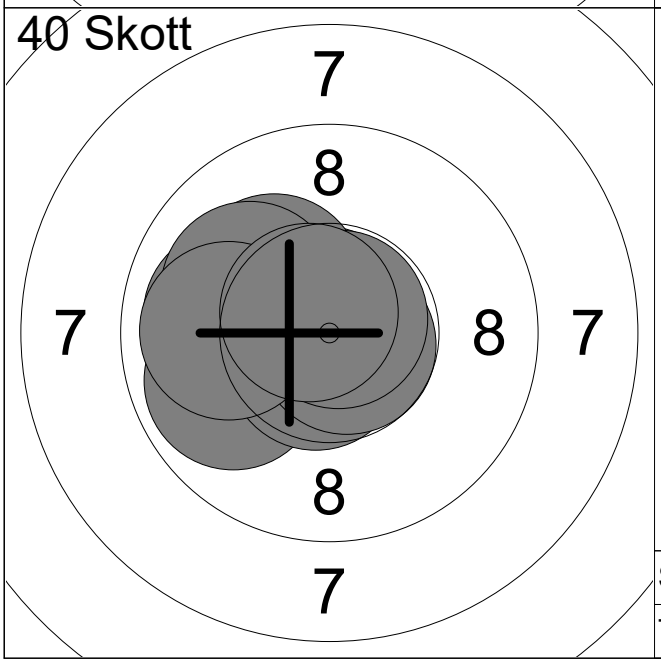

1:	9.9	↙
2:	10.6x	↙
3:	10.8x	↑
4:	10.0	←
5:	10.2x	↖
6:	10.7x	↘
7:	10.0	↖
8:	10.8x	↗
9:	9.9	←
10:	10.7x	↖
Serie		103.6
Total		499.6

Skjutlag	Tavla	
3	28	Bengt Lindberg

Umeå	Bjurholm/Balsjö Skf		Vb
27.01.2024	Förbundsmästerskap 2024	Umeå skytteallians	

Prov

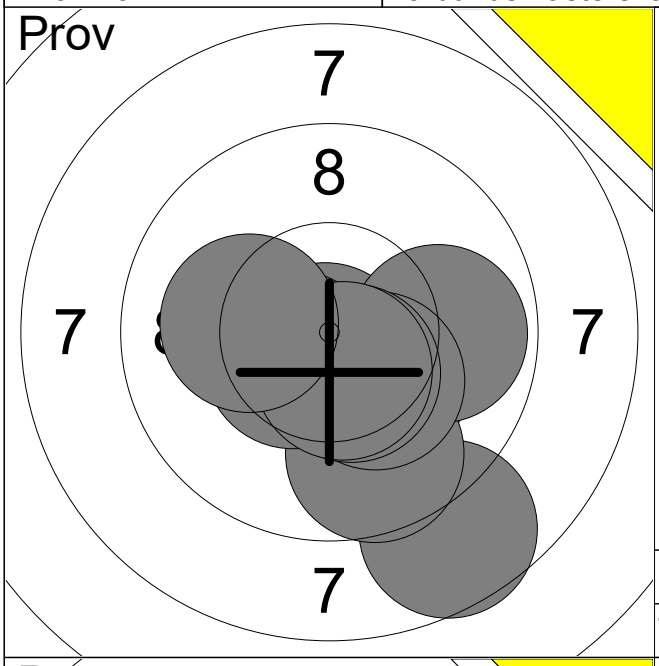

1:	8.6	↘
2:	10.3x	↘
3:	9.6	↓
4:	10.7x	↓
5:	9.9	→
6:	10.3x	↘
7:	10.5x	↙
8:	10.5x	↘
9:	10.5x	↓
10:	10.1	←
Serie		101.0
Total		396.0

Prov

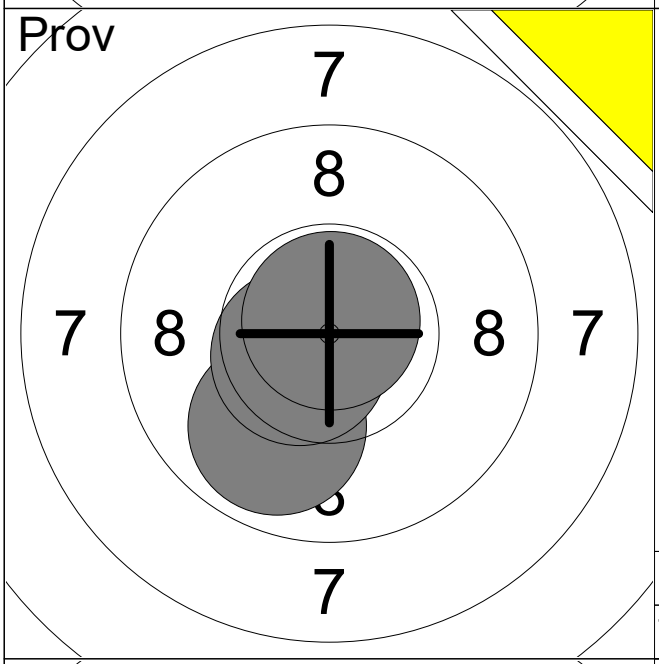

11:	9.9	↙
12:	10.6x	↙
13:	10.8x	↑
Serie		31.3
Total		396.0

40 Skott

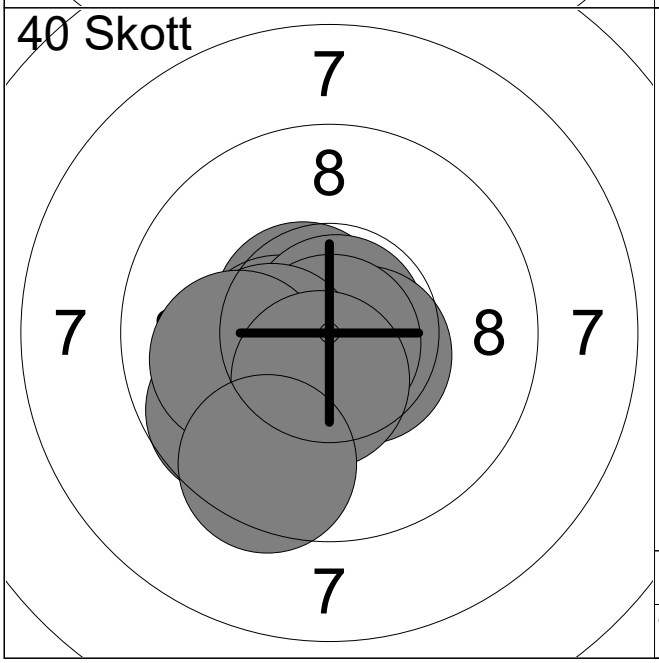

1:	10.6x	↖
2:	10.4x	←
3:	10.8x	↗
4:	10.5x	↘
5:	9.7	↙
6:	10.8x	↓
7:	10.3x	←
8:	10.0	←
9:	10.5x	↓
10:	9.5	↙
Serie		103.1
Total		499.1

Skjutlag	Tavla	
3	29	Fredrik Byström

Umeå	Umeå Skf		Vb
27.01.2024	Förbundsmästerskap 2024	Umeå skytteallians	

Prov

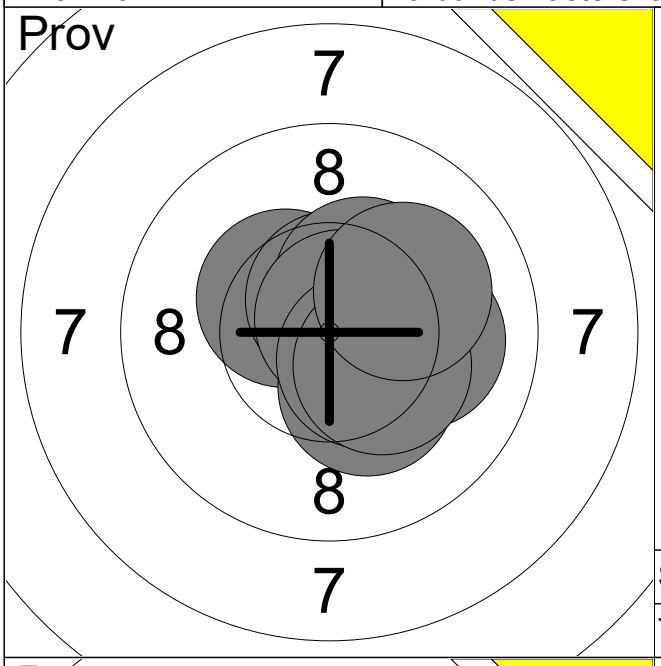

1:	10.1	→
2:	10.5x	→
3:	10.4x	↖
4:	10.6x	↑
5:	10.4x	↗
6:	10.3x	↘
7:	10.7x	↗
8:	10.5x	↘
9:	10.3x	↘
10:	10.1	↗
Serie		103.9
Total		395.0

Prov

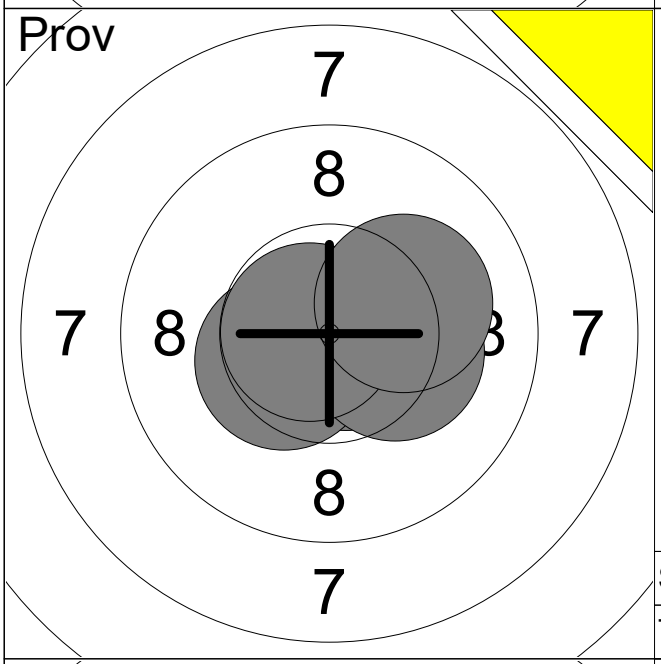

11:	10.8x	↘
12:	10.4x	↙
13:	10.3x	↘
14:	10.7x	←
15:	10.1	↗
Serie		52.3
Total		395.0

40 Skott

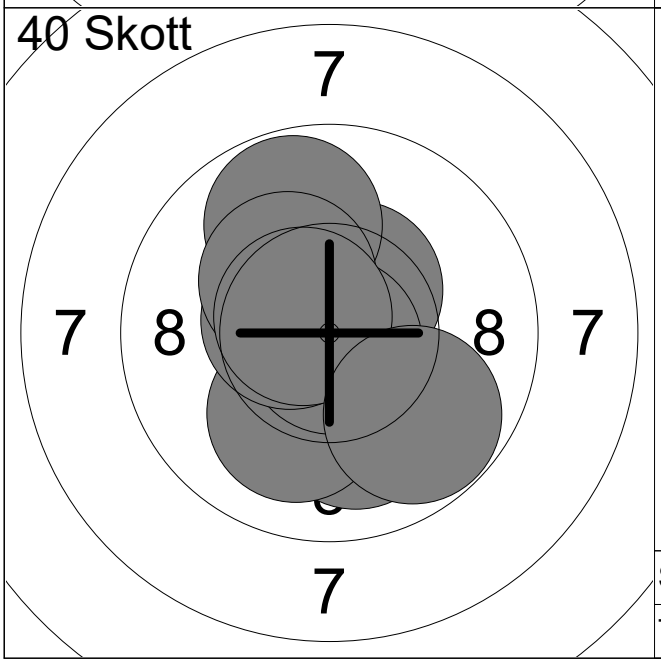

1:	10.8x	↑
2:	10.0	↓
3:	10.1	↙
4:	10.5x	↗
5:	9.8	↑
6:	10.8x	↓
7:	10.5x	↖
8:	10.3x	↑
9:	10.6x	↖
10:	9.8	↘
Serie		103.2
Total		498.2

Skjutlag	Tavla	
3	30	Isabell Lindberg

Umeå	Ramselefors Skf		Vb
27.01.2024	Förbundsmästerskap 2024	Umeå skytteallians	

Prov

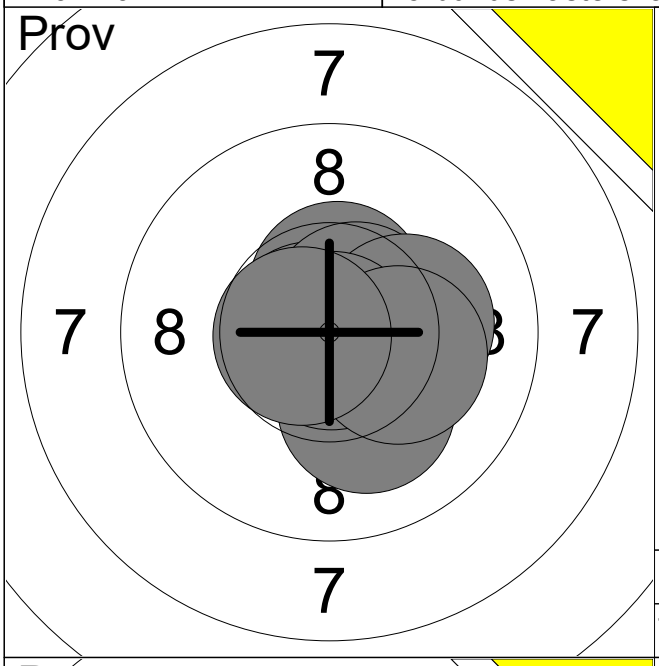

1:	10.5x	↑
2:	10.8x	←
3:	10.6x	→
4:	10.6x	↘
5:	10.1	↘
6:	10.6x	↗
7:	10.2x	→
8:	10.9x	↓
9:	10.2x	↘
10:	10.7x	←
Serie		105.2
Total		395.0

Prov

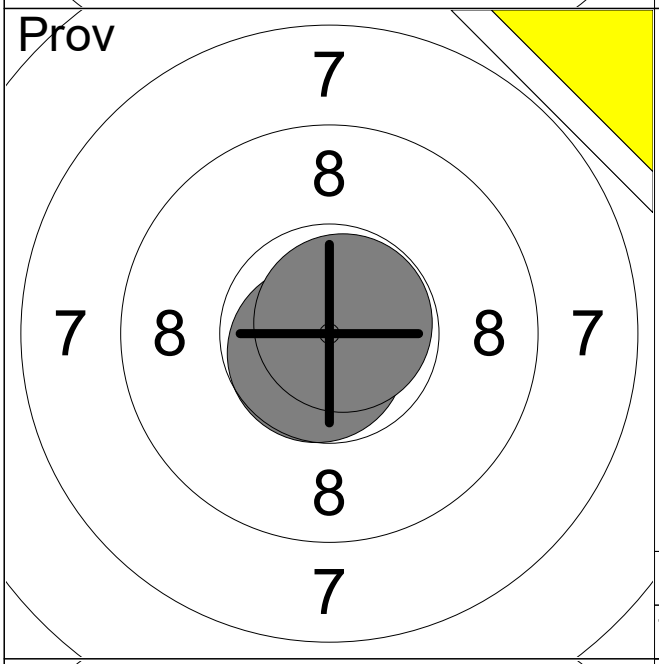

11:	10.7x	↙
12:	10.8x	↗
Serie		21.5
Total		395.0

40 Skott

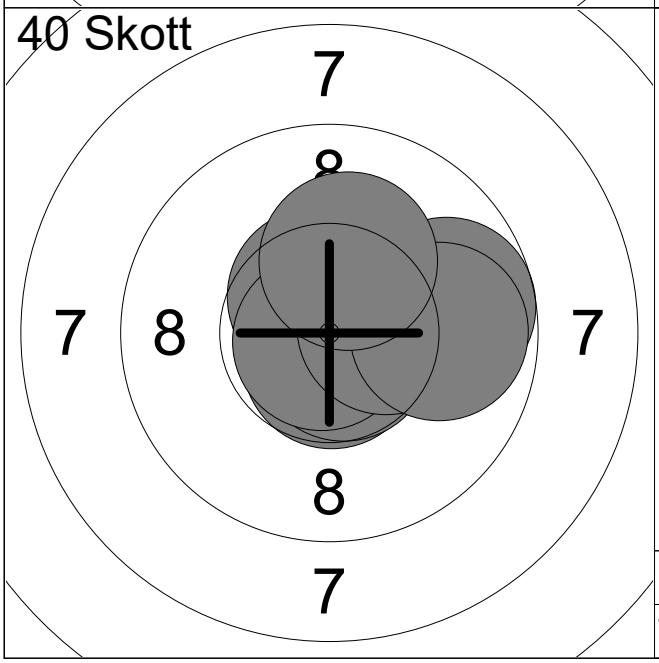

1:	10.7x	↖
2:	10.5x	↗
3:	10.7x	↓
4:	10.6x	↖
5:	9.7	→
6:	10.7x	↘
7:	10.8x	↙
8:	10.4x	→
9:	9.8	→
10:	10.2x	↑
Serie		104.1
Total		499.1